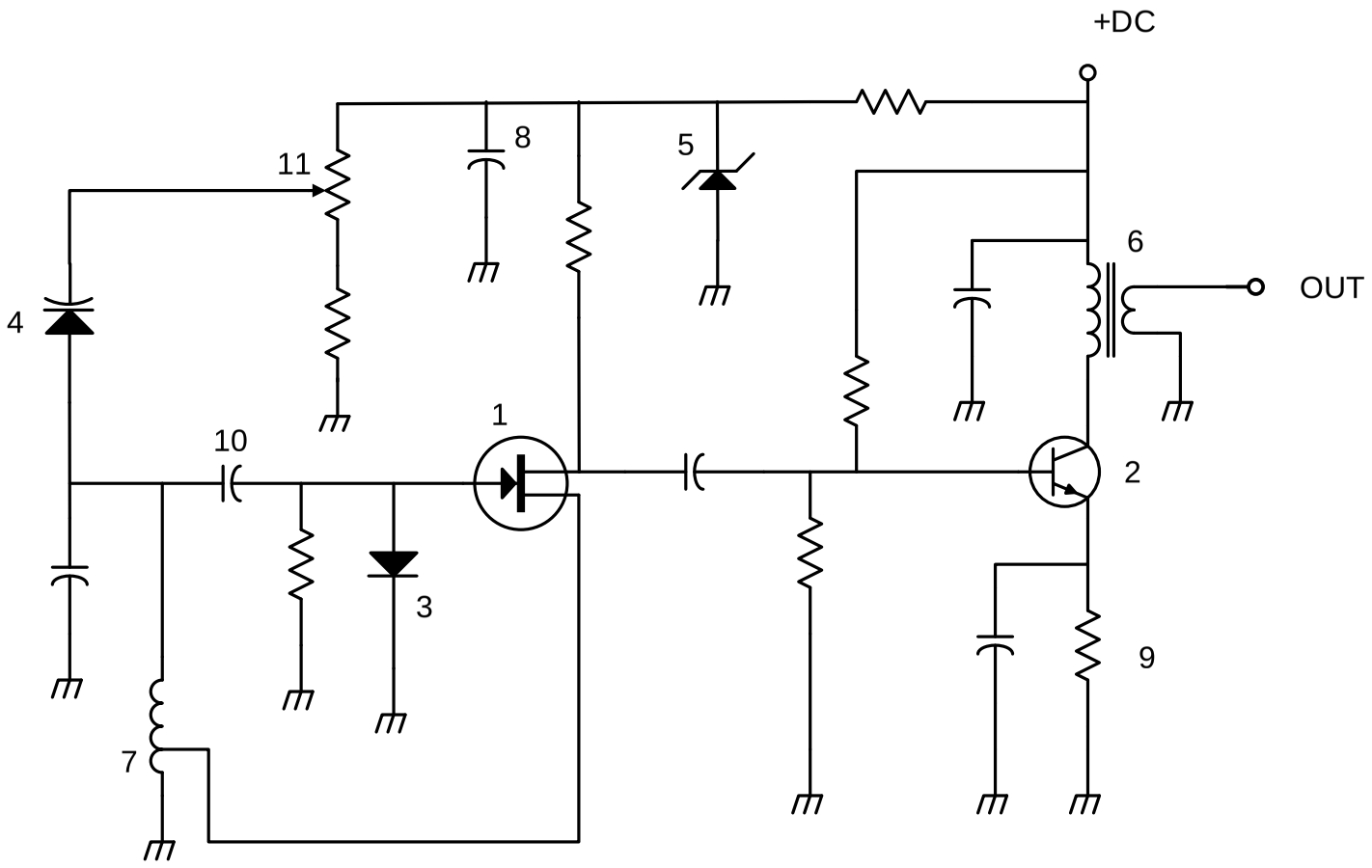

Figure G7-1